GAME PLAN, INC.

SUPER NOVA PINBALL

(MODEL 150)

INSTALLATION

AND

REPAIR MANUAL

GAME PLAN, INC.
1515 W. FULLERTON AVE.
ADDISON, IL. 60101

02-30036A

B. Table 2 SWITCH IDENTIFICATION

In the switch checkout section of the diagnostic routine the number of the closed switch is shown in each display. Closing any switch causes its number to be displayed. It is normal for one Space Lab switch to be closed and closing any other switch will override it. The following list identifies each switch by number:

SWITCH FUNCTION

Accounting Reset.....010
Credit Button.....020
Slam Switch.....030
1000 & Spin Lab Target.....040
Coin Chute 2.....050
Coin Chute 3.....060
Coin Chute 1.....070
Tilt Switch.....080
10 Pt. Score Switches.....090
Extra/1000 pts.....100
Ball Return.....110
100 & Advance Ursa Bonus.....120
100 & Advance Orion Bonus.....130
"A" Rollover.....140
Left Sling Shot.....150
1000 & Advance Lit Bonus.....160
Uranus Target.....170
5000 Pt. Lane.....180
Ursa Kickout.....190
Orion Kickout.....200
Upper Thumper.....210
Bottom Thumper.....220
Spinner.....230
Right Slingshot.....240
"V" Rollover.....250
Diagnostic and Accounting.....260
"S" Rollover.....270
"U" Rollover.....280
"P" Rollover.....290
"E" Rollover.....300
"R" Rollover.....310
"O" Rollover.....320
Middle Thumper.....330
"N" Rollover.....340
Orion X 3*.....350
Special*.....360
Extra Ball*.....370
50,000*.....380
Ursa X 3*.....390
Comet X 5*.....400

* Denotes Space Lab Switches

MODEL 150 INSTALLATION AND REPAIR MANUAL

INSTALLATION INDEX

I. GENERAL INSTALLATION..... 3
II. GENERAL GAME OPERATION..... 3
III. FEATURE OPERATION & SCORING..... 4
IV. ACCOUNTING FUNCTIONS..... 5
V. GAME ADJUSTMENTS..... 7
A. PLAYFIELD ADJUSTMENTS..... 7
B. MPU SET UP SWITCHES..... 7
CREDIT/COIN..... 7
LIBERAL/CONSERVATIVE PLAY ADJUSTMENTS..... 8
FREE PLAY..... 9
TUNE OPTION..... 9
MAXIMUM CREDITS..... 10
BALLS PER GAME OPTION..... 10
REPLAY OR FREE BALL AWARD..... 10
MATCH FEATURE..... 11
CREDITS FOR EXCEEDING HIGH SCORE..... 11
VI. ROUTINE MAINTENANCE ON LOCATION..... 12

REPAIR INDEX

I. INTRODUCTION..... 13
II. MODULE REPLACEMENT DIAGNOSTICS..... 13
III. COMPONENT REPLACEMENT
DIAGNOSTICS (MPU BOARD)..... 17
A. POWER UP AND CTC1 PROCEDURE..... 18
B. CTC2 PROCEDURE..... 19
C. CMOS RAM PROCEDURE..... 20
D. NMOS RAM PROCEDURE..... 20
E. I/O PROCEDURE..... 20

F. ROM PROCEDURE..... 20
G. OUTPUT PROCEDURE..... 21
IV. POWER SUPPLY DIAGNOSTICS..... 22
V. SOLENOID AND SWITCH IDENTIFICATION..... 24
A. TABLE 1 - SOLENOID IDENTIFICATION..... 24
B. TABLE 2 - SWITCH IDENTIFICATION..... 25

INSTALLATION

I. GENERAL INSTALLATION

Remove backbox, cabinet and legs from the shipping container. Bolts required for assembly, tilt ball and game ball are shipped inside the cashbox. Mount the legs to the cabinet. Pull the line cord through the hole in the cabinet and place it in the slot at rear of the cabinet. Place backbox on the cabinet and mount with the four bolts provided. Pull cables up through the hole in the bottom of the backbox and connect to the backbox connectors. Note that the connectors and headers are color coded to prevent connection errors. Connect ground braid to backbox shielding screw.

Check all connections to ensure that none vibrated loose during shipping. Check playfield wiring and cabinet wiring for shipping damage. Check that all fuses are firmly in place. Adjust the leg levelers, check the tilt bob adjustment and insert roll-tilt ball. Lower the playfield, and place the game ball in the shooter alley.

Plug the game into a grounded outlet only of specified voltage. Do not remove the ground plug or use a cheater plug to defeat the grounding system.

The game is now ready to power up and check out. Refer to section VI, routine maintenance on location, for check out.

II. GENERAL GAME OPERATION

Turn on the on-off switch located under the cabinet near the right front leg. The displays should stay blank for approximately 7 seconds. During this time the MPU circuit board is exercising its self diagnostic routine, the game over tune will play and the displays will alternately flash zeros and high score to date.

Coin the game. The game should play the coin tune if selected

and increment the credit display. Press the credit button. The start of game tune should play if selected, the credit display should decrement, the first player should flash for the player up, ball in play 1 should be lit for number of players and the ball should be served to the shooter alley if sitting in the ball return hole.

Pressing the credit button again will cause the number of players to be incremented with each depression to a maximum of four.

III. FEATURE OPERATION & SCORING

The S-U-P-E-R and N-O-V-A rollovers advance score 1000 PTS. and increment lit bonus (liberal), or simply advance score 100 PTS. (conservative) for the first time scored. They advance score 100 PTS. for each additional time scored on current ball. Scoring S-U-P-E-R or N-O-V-A (liberal) or S-U-P-E-R and N-O-V-A (conservative) advances bonus multiplier. Active bonus is selected by arrows at bottom of playfield. The lit arrow points to active bonus and lit arrow alternates when 10 PT. switch or slingshot is activated. 1000 and spin lab targets score 1000 PTS. and cause the Space Lab to spin for a random time. The feature showing at the end of the Space Lab spin has its corresponding playfield feature lit. These features are EXTRA, SPECIAL, 50,000, COMET 500, URSA X3, and ORION X3. Comet 500 causes the spinner lane to score 500 points per spin instead of the normal 100 points. The spinner always advances the lit bonus once per spin. URSA X3 and ORION X3 score triple bonus when collected from the URSA and ORION kickout holes. The center stand-up target scores 5,000 PTS., 50,000 PTS. when lit, or Special when lit. Scoring Special from center stand-up target causes Space Lab to spin. Scoring 50,000 from center target causes Space Lab to spin (conservative) or not to spin (liberal). The URSA and ORION kickout holes score 500 PTS., collect their respective bonus, and then either restore the bonus (liberal) or cancel the bonus (conservative). Scoring S-U-P-E-R and N-O-V-A after 5X multiplier is achieved gives 50,000 PTS.

The top and bottom thumper score 100 PTS. or 1000 PTS. when lit. The center thumper scores 100 PTS. or 5,000 PTS. when lit. The top thumper is lit by scoring S-U-P-E-R. The bottom thumper is lit by scoring N-O-V-A. The center thumper is lit by advancing bonus to X 3. The lower inside lanes score 1000 PTS. and advance the lit bonus, the lower out lanes score 5,000 PTS.

Liberal or conservative game play is controlled by MPU set up switches 7, 13, 14 and 15. For switch settings refer to Section V, Game Adjustments.

Exceeding high score to date awards credits, if optioned, at the end of the game and the displayed high score to date is automatically updated.

Tilting the game results in loss of current ball and the flippers and all playfield features go dead. Slamming the machine results in loss of the game, and the game goes into a delay mode for approximately 15 seconds. The kickouts are always active except during this delay. If a ball falls in either kickout hole during the slam delay it will be kicked out immediately after the delay.

At the end of the game, the game over tune plays and the match number shows in the ball play display if optioned. The game goes into a game over delay for approximatley 5 seconds and then alternately flashing last game score and high score to date on the displays.

IV. ACCOUNTING FUNCTIONS

NOTE: The game must be in the game over mode before entering into the accounting routines.
The accounting routines are entered by pressing the test switch inside the coin door. The number of the accounting function

is shown in the ball in play display and the count for that function is shown on all four players displays. Continued pressing of that test switch will cause the game to cycle through all the accounting functions. If the game is left in one of the accounting functions, it will automatically return to game over after approximately 30 seconds.

Any accounting function can be reset by pressing S33 on the MPU board while that particular accounting function is being displayed.

Replay levels and high score to date are reset to 100,000. all other accounting functions are reset to zero.

The sequence of accounting functions are as follows:

1. Coin Counter #1
2. Coin Counter #2
3. Coin Counter #3
4. Total Plays
5. Total Replays
*6. Replay Level #1
*7. Replay Level #2
*8. Replay Level #3
*9. High Score to Date
10. Number of times high score to date has been exceeded
11. Number of Credits On Game

*Resets to 100,000 by pressing S33 on MPU board, can be incremented 10,000 points for each depression of the credit button.

NOTE: It is possible to set replay levels of over one million. If desired, the 3rd or 2nd and 3rd replay levels can be effectively eliminated by setting them at values over 1 million. This is accomplished by pressing the credit button to increment replay level by 10,000 until the one million score is passed. At this point any level showing on the display will actually be one million + the level. Eliminating the 1st replay level eliminates all the replay levels because the 2nd

Level cannot be reached until the 1st level has been achieved, and the 3rd level cannot be reached until the 2nd level has been achieved. TO AVOID ACCIDENTALLY SETTING REPLAY LEVELS AT OVER ONE MILLION ALWAYS PRESS S33 ON THE MPU BOARD FIRST WHEN LOWERING LEVELS.

When reading counters 1 through 5, 10 and 11 do not include the units digit which is always zero.

For example, if 006240 is displayed for coin counter 1, then 624 coins have been counted. If 000120 is displayed for number of credits on the game, thenthere are 12 credits on the game.

V. GAME ADJUSTMENTS

A. PLAYFIELD ADJUSTMENTS

The left and right outlane openings are adjusted by moving the adjacent post back or forward in its slot. A smaller opening to the outlane will increase playing time and scoring.

B. MPU SET UP SWITCHES

The MPU P.C. board has 32 set up switches that allow play to be customized to the location. The switches are contained in four switch packs numbered S1-8, S9-16 S17-24 and S25-32. Switch selectable options are credits per coin, tune options, maximum credits allowed, 3 or 5 balls per game option, replay or free ball award, match feature, and credits for exceeding high score.

CREDITS/COIN ADJUSTMENT

S9 through S12 select the credits per coin for coin chute 2. Switch setting and resultant per coin as follows:

S12	S11	S10	S9	CREDITS/COIN
OFF	OFF	OFF	OFF	SAME AS COIN CHUTE #1 SETTING
OFF	OFF	OFF	ON	1/1 COIN
OFF	OFF	ON	OFF	2/1 COIN
OFF	OFF	ON	ON	3/1 COIN
OFF	ON	OFF	OFF	4/1 COIN
OFF	ON	OFF	ON	5/1 COIN
OFF	ON	ON	OFF	6/1 COIN
OFF	ON	ON	ON	7/1 COIN
ON	OFF	OFF	OFF	8/1 COIN
ON	OFF	OFF	ON	9/1 COIN
ON	OFF	ON	OFF	10/1 COIN
ON	OFF	ON	ON	11/1 COIN
ON	ON	OFF	OFF	12/1 COIN
ON	ON	OFF	ON	13/1 COIN
ON	ON	ON	OFF	14/1 COIN
ON	ON	ON	ON	15/1 COIN

S1 through S5 select the credits per coin for chute 1. S17 through S21 select the credits per coin for coin chute 3. Switch settings and resultant credits per coin are identical for coin dhutes 1 and 3 and are as follows:

CREDITS/COIN ADJUSTMENTS

COIN CHUTE #1	SWITCHES					CREDITS/COIN
	5	4	3	2	1	
	21	20	19	18	17	
	OFF	OFF	OFF	OFF	OFF	3/2 COINS
	OFF	OFF	OFF	OFF	ON	3/2 COINS
	OFF	OFF	OFF	ON	OFF	1/ COIN
	OFF	OFF	OFF	ON	ON	1/2 COINS
	OFF	OFF	ON	OFF	OFF	2/ COIN 2 – 25¢
	OFF	OFF	ON	OFF	ON	2/1 COINS
	OFF	OFF	ON	ON	OFF	3/ COIN
	OFF	OFF	ON	ON	ON	3/2 COINS
	OFF	ON	OFF	OFF	OFF	4/ COIN
	OFF	ON	OFF	OFF	ON	4/2 COINS
	OFF	ON	OFF	ON	OFF	5/ COIN
	OFF	ON	OFF	ON	ON	5/2 COINS
	OFF	ON	ON	OFF	OFF	6/ COIN
	OFF	ON	ON	OFF	ON	6/2 COINS
	OFF	ON	ON	ON	OFF	7/ COIN
	OFF	ON	ON	ON	ON	7/2 COINS
	ON	OFF	OFF	OFF	OFF	8/ COIN
	ON	OFF	OFF	OFF	ON	8/2 COINS
	ON	OFF	OFF	ON	OFF	9/ COIN
	ON	OFF	OFF	ON	ON	9/2 COINS
	ON	OFF	ON	OFF	OFF	10/ COIN
	ON	OFF	ON	OFF	ON	10/2 COINS
	ON	OFF	ON	ON	OFF	11/ COIN
	ON	OFF	ON	ON	ON	11/2 COINS
	ON	ON	OFF	OFF	OFF	12/ COIN
	ON	ON	OFF	ON	ON	12/2 COIN
	ON	ON	OFF	ON	OFF	13/ COIN
	ON	ON	OFF	OFF	ON	13/2 COINS
	ON	ON	ON	OFF	OFF	14/ COIN
	ON	ON	ON	ON	ON	14/2 COINS
	ON	ON	ON	ON	OFF	15/ COIN
	ON	ON	ON	ON	ON	15/2 COINS

LIBERAL/CONSERVATIVE PLAY ADJUSTMENTS

The following switches have liberal and conservative settings to customize game play to the location. For each switch the liberal settings is "ON", the conservative setting is "OFF".

50,000 Lite	S7
Space Lab stays on 50,000 until spun off	ON
Space Lab spins when 50,000 scored on center target.	OFF

INSTRUCTION CARD #150-3-4-5-6-7

URSA and ORION bonus carry over	S13
Restore bonus after collected	ON
Cancel bonus after collected	OFF

INSTRUCTION CARD #150-3-4-5-6-7

Super Nova rollover scoring	S14
Advance Lit bonus and score 1000 PTS. on Super Nova rollovers until 2X multiplier is achieved.	ON
Super Nova rollovers score 100 PTS. only.	OFF

INSTRUCTION CARD #150-3-4-5-6-7

Super Nova multiplier advance	S15
Super or Nova advance multiplier	ON
Super and Nova advance multiplier	OFF

INSTRUCTION CARD #150-5-6

FREE PLAY OPTION

The game has provision for allowing free play. When the free play is on, credits are decremented normally until 0 credits, then pressing the credit button puts 99 credits on the game and they continue to be decremented.

FREE PLAY	S16
ON	ON
OFF	OFF

TUNE OPTION

The game is designed to play a tune for each credit incremented from the coin switch, start of game and power up/game over. The first two tunes are selectable by S16, however the power up/game over tune is always enabled. When the tune switch is off, the coin and start of game tunes are replaced by a single chime.

TUNES	S16
ON	ON
OFF	OFF

MAXIMUM CREDITS

The maximum number of credits that will be accepted by the game either through the coin switch or replay award are controlled by S25, S26 and 27. Switch Settings are as follows:

MAXIMUM CREDIT	SWITCHES 27	26	25
5	OFF	OFF	OFF
10	OFF	OFF	ON
15	OFF	ON	OFF
20	OFF	ON	ON
25	ON	OFF	OFF
30	ON	OFF	ON
35	ON	ON	OFF
40	ON	ON	ON

BALLS PER GAME OPTION

# BALLS PER GAME	S28
5	ON
3	OFF

REPLAY OR FREE BALL AWARD

The game is designed to award either a replay or free ball at three selectable score levels or through specials gained during the play of the game.

AWARD	S29
REPLAY	ON
EXTRA BALL	OFF

MATCH FEATURE

When the match feature is ON, a random number appears in the ball in play display at game over. A replay is awarded if the number matches the tens digit in a player's score.

MATCH	S30
ON	ON
OFF	OFF

CREDITS FOR EXCEEDING HIGH SCORE

The game is designed to award replays for beating the previous high score to date.

The winning score becomes the new high score to date.

CREDITS	S32	S31
0	OFF	OFF
1	OFF	ON
2	ON	OFF
3	ON	ON

VI. ROUTINE MAINTENANCE ON LOCATION

The game is equipped with two separate diagnostic programs to aid in routine maintenance. The first test occurs automatically at power up. The MPU board goes into its self-test routine, and upon successful completion plays the game over tune.

The second diagnostic program is accessed by depressing the test switch inside the front cabinet door.

NOTE: THE GAME MUST BE IN THE GAME OVER MODE.

1. Depress the test switch twelve times to access the diagnostic routine. The score display will extinguish and all feature lamps will flash. Check for burned out lamps at this time.

2. Depress the test switch again to start the score display checkout. All digits except the units digits will count through 0-9.

3. Depress the test switch again to begin the solenoid checkout. Each solenoid will actuate individually and show its number on the score displays. Refer to table 1 of repair section for solenoid numbers.

4. Depress the test switch again to start the switch Checkout. Any closed switch will show its number on the score display. Refer to table 2 of the repair section for switch numbers. It is normal for one of the Space Lab switches to be closed.

NOTE: THE BALL SHOULD NOT BE IN THE OUTHOLE DURING THIS TEST.

Depressing the test switch again puts the game back in the game over mode. The diagnostic routine should be exercised on a regular basis to ensure proper operation of the game.

REPAIR

I. INTRODUCTION

Repair of the game on location is by printed circuit board, solenoid, switch, or lamp replacement, or by cable harness repair. No special tools or equipment are required other than a standard soldering iron, hand tools and volt/ohmmeter.

Troubleshooting faults in the game is aided by the use of the two built in diagnostic routines. The first test is initiated automatically at power up as the MPU board exercises its self diagnostic routine. As each section of the MPU board is checked, the red LED located near the top of the board flashes for successful completion of each test. After six flashes, the game over tune plays to indicate correct MPU operation.

The second diagnostic program is entered by pressing the test switch inside the front cabinet door. Pressing the test switch 12 times will step through all the accounting functions and put the game into the diagnostic program. All feature lamps should flash. Pressing the test switch again causes the display to sequence from 0 through 9. Pressing the switch again causes all the solenoids to sequence. Refer to table 1 for solenoid numbers. Pressing the switch again causes closed switch to be displayed. Refer to table 2 for switch numbers. Pressing the test switch again will put the game back in the game over mode.

II. MODULE REPLACEMENT DIAGNOSTICS

SYMPTON 1. Power up LED does not flash 6 times. General illumination lamps do not light.

	CAUSE	PROCEDURE
A.	Power Supply Incorrect	Refer To Power Supply Diagnostics.

SYMPTOM 2. Power up LED does not flash 6 times. General illumination lamps do light.

	CAUSE	PROCEDURE
A.	+5V Incorrect	Measure +5V ± .25V at TP1 of MPU board. If incorrect refer to power supply diagnostics.
B.	24VDC Incorrect	Measure 24VDC ± 6V at J1-3 of MPU Board. If incorrect refer to power supply diagnostics. If correct replace MPU Board.

SYMPTOM 3. Power up LED flashes 6 times, game over tune does not play correctly.

	CAUSE	PROCEDURE
A.	Incorrect output from MPU Board.	Replace MPU Board
B.	Faulty Sound Board	Replace Sound Board

SYMPTOM 4. One or more but less than 15 feature lamps do not light.

	CAUSE	PROCEDURE
A.	Burned Out Bulb	Replace bulb
B.	Faulty lamp driver board	Replace lamp driver board

SYMPTOM 5. More than 15 lamps do not light.

	CAUSE	PROCEDURE
A.	Faulty Lamp Driver Board	Replace Lamp Driver Board

SYMPTOM 6. One display board shows incorrect data during sequencing.

	CAUSE	PROCEDURE
A.	Faulty Display Board	Replace Display Board
B.	Faulty MPU Board Output	Replace MPU Board

SYMPTOM 7. All display boards show incorrect data during sequencing.

	CAUSE	PROCEDURE
A.	Faulty MPU Board Output	Replace MPU Board

SYMPTOM 8. One solenoid does not operate.

	CAUSE	PROCEDURE
A.	Faulty Solenoid	Replace Solenoid
B.	Faulty Solenoid Driver Board	Replace Solenoid Driver

SYMPTOM 9. More than one solenoid does not operate.

	CAUSE	PROCEDURE
A.	Faulty Solenoid Driver Board	Replace Solenoid Driver Board
B.	Faulty MPU Board Output	Replace MPU Board

SYMPTOM 10. None of the solenoids operate.

	CAUSE	PROCEDURE
A.	+24V missing at solenoids	Check +24V at solenoids

If incorrect look for broken wire between +24V at power supply and solenoids and refer to power supply diagnostics.

	CAUSE	PROCEDURE
B.	+5V missing at solenoid driver board	Check +5 at solenoid driver board. If incorrect look for broken wire between +5V at power supply and solenoid driver board.
C.	Faulty solenoid driver board	Replace solenoid driver Board

SYMPTOM 11. Switch always closed.

	CAUSE	PROCEDURE
A.	Stuck Switch	Locate switch from switch identification table and repair or replace switch.

III. Component Replacement Diagnostics (MPU Board)

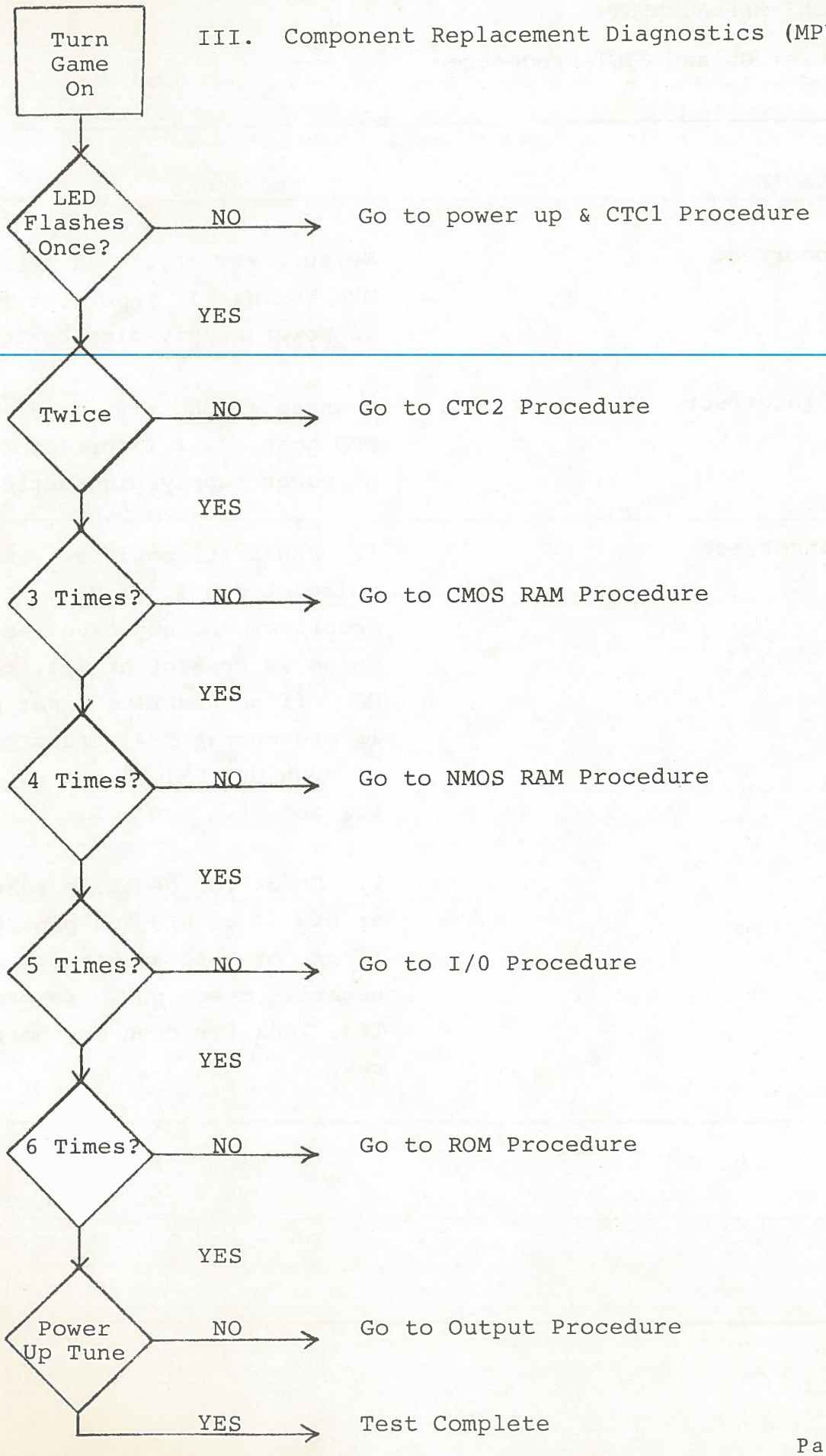

COMPONENT REPLACEMENT

A. Power Up and CTC1 Procedure

CAUSE	PROCEDURE
+5V Incorrect	Measure +5V ± .25V at TP1 of MPU board. If incorrect refer to power supply diagnostics.
+24VDC Incorrect	Measure +24VDC ± 6V at J1-3 of MPU board. If incorrect refer to power supply diagnostics.
Reset Incorrect	1. Check for positive reset pulse at pin 35 of U17. If incorrect and negative reset pulse is present at TP4, replace QC. If no negative reset pulse is present at TP4, trace back through QD, QA, QB, U5 and U3 for defect. 2. Check for negative reset pluse at pin 17 of U10 and pin 26 of U11. If one or both are incorrect and a negative reset pulse is present at TP4, look for open or shorted foil run.

		If both are incorrect and no negative reset pulse present at TP4, trace back through QD, QA, QB, U5 and U3 for defect.
D.	Oscillator Incorrect	Check TP5 for a square wave with à period of about 400ns. If Incorrect trace back through U3 to the crystal.
E.	LED Circuit Defective	Check for positive pulse at base of QE. If present replace QE. If operation still incorrect replace LED.
F.	U10, U11, U17, U6, U7, U8, U12, U13, U26, U24, U25, U4, U3, or U9 defective.	Replace one at a time with known good parts until fault is cleared.

CTC2 PROCEDURE

CAUSE	PROCEDURE
CTC zero cross over input incorrect.	Check pin 21 or U10 for positive zero cross over pulse. If incorrect trace back through U3 and U2.
U10 Defective	Replace U10 with known good I.C.

U3 Defective	Replace U3 with a known good I.C.
U11, U6, U7, U8, U12, U13, U26 or U17 defective	Replace one at a time with known good parts until fault is cleared.

C. CMOS RAM Procedure

CAUSE	PROCEDURE
CMOS RAM Defective	Replace U6 and U7, one at a time.
CMOS Gate Defective	Replace U9.

D. NMOS RAM Procedure

CAUSE	PROCEDURE
NMOS RAM Defective	Replace U8
NMOS RAM Chip Select Defective	Replace U5 and U24, one at a Time.

E. I/0 Procedure

CAUSE	PROCEDURE
I/0 Defective	Replace U17
I/0 chip select gate defective	Replace U4

F. ROM Procedure

CAUSE	PROCEDURE
ROM Defective	Replace U12, U13 and U26, one at a time

G. OUTPUT PROCEDURE

CAUSE	PROCEDURE
U14, U16, U20, U21, U15, U19, U22, U18 or U23 Defective	Replace on at a time with known good parts.

IV. POWER SUPPLY DIAGNOSTICS

CAUTION: The power supply contains dangerous voltage levels. Use extreme caution while troubleshooting.

Symptom 1. +5V incorrect, +12V incorrect

CAUSE	PROCEDURE
Defective +5V regulator	Change LM323 with known good.

SYMPTOM 2. +5V incorrect, +12V Incorrect

CAUSE	PROCEDURE
Fuse Blown (+12V)	Replace fuse check 10.5 VAC input to bridge. If correct, replace bridge with known good. If +5 and +12V still do not come up, replace 11,000 MF Capacitor.
Defective Bridge	

SYMPTOM 3. +5 and +12V correct +24V incorrect.

CAUSE	PROCEDURE
Fuse Blown (28VAC) on power supply defective bridge.	Replace Fuse check 28VAC. If correct replace bridge with known good part.
Playfield fuse blown	Replace Fuse.

SYMPTOM 4. +5, +12, +24V correct, +7V incorrect

CAUSE	PROCEDURE
Fuse Blown (8VAC)	Replace Fuse.
defective bridge	Check 8 VAC. If correct, replace bridge with known good part.

SYMPTOM 5. Ac voltage incorrect on one or more, but not all secondary windings.

CAUSE	PROCEDURE
Defective Transformer Winding	Remove fuse from defective secondary. If voltage still still incorrect replace transformer. If voltage comes up, disconnect all PC Boards that the winding goes to, reinsert fuse and plug PC boards back until defect reappears.

SYMPTOM 6. No secondary AC voltage at transformer, primary voltage correct.

CAUSE	PROCEDURE
Defective Transformer	Replace with known good transformer.

V. SOLENOID AND SWITCH IDENTIFICATION

A. TABLE 1.

SOLENOID IDENTIFICATION

The solenoid checkout section of the diagnostic routine actuates each solenoid on the playfield. The solenoid number is shown in each display as the solenoid is being actuated. The following list identifies each solenoid by number:

Ball Return	010
Top Thumper	020
Bottom Thumper	030
Middle Thumper	040
Left Kickout (Ursa)	050
Right Kickout (Orion)	060
Left Slingshot	070
Right Slingshot	080
Not Used	090
Not Used	100
Not Used	110
Not Used	120
Not Used	130
Not Used	140
Not Used	150
Flipper Relay Enable	160
Feature Lamps On	170
Feature lamps Off	180

GamePlan, inc.
A subsidiary of
AES Technology Systems, Inc
1515 W. Fullerton Ave.
Addison, Ill. 60101
Telephone 312/628-8200

3-26-80

Dear Sirs;

At the time of Shippment, our Super Nova Parts Catalog, has not come in from the Printers. Please write or call, and as soon as they are available one will be shipped.

Thank You;

Beverly DePew

Beverly DePew

GamePlan, inc.
A subsidiary of
AES Technology Systems, Inc
1515 W. Fullerton Ave.
Addison, Ill. 60101
Telephone 312/628-8200

April 1, 1980

MEMO

TO: All Game Plan, Customers

FROM: Game Plan Field Service

SUBJECT: Model 150 (SUPER NOVA) Wire Color Changes.

GENTLEMEN:

Due to the color similarity in the wires that we are using we are forced to change two of the wire colors already on the Playfield Schematic, and they are as follows:

1. A Black and Brown wire that goes from the Yellow 15 Point connector (Playfield) to the rollover letter "E" was changed to a Blue and Orange wire.

2. A White and Green wire that goes from ground to the SCU-1 board connector was changed to a White Gray wire.

Thank You,

Game Plan Inc.

Rene A Lopez

Service Manager

RAL: kk

Drawing Number
02-7002[illegible]

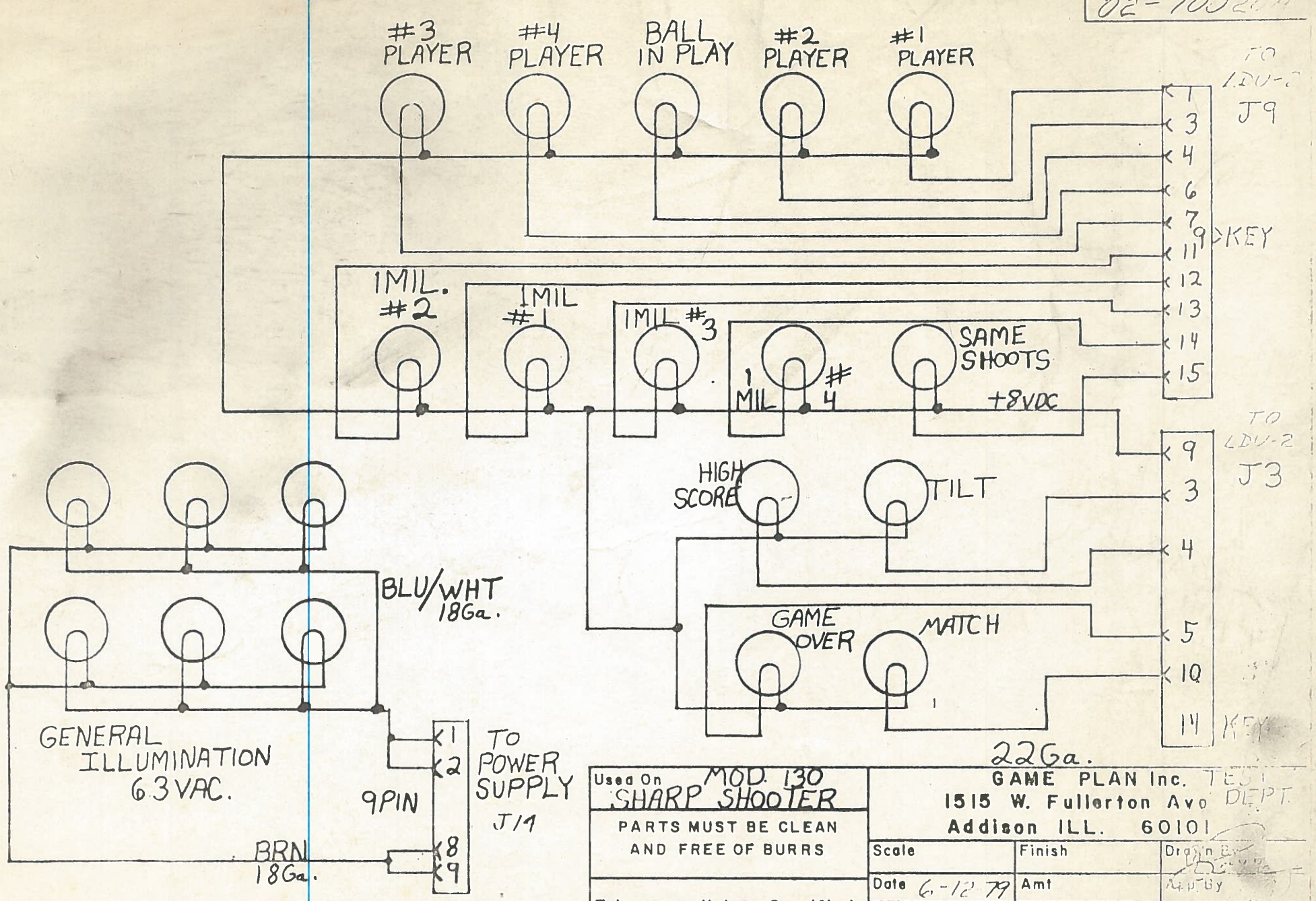

ISSUE	CHANGE	DATE

Used On MOD. 130 SHARP SHOOTER

PARTS MUST BE CLEAN AND FREE OF BURRS

Tolerances Unless Specified
Fractional ± .015
Decimal ± .005
Angles ±1/2
Screw Threads — Class 2

GAME PLAN Inc. TEST DEPT.
1515 W. Fullerton Ave
Addison ILL. 60101

Scale	Finish	Drawn By
Date 6-12-79	Amt	Ap'd By
Mat'l		Drawing Number 02-7002[illegible]

INSERT WIRE[illegible] DIAG[illegible] MODEL[illegible]

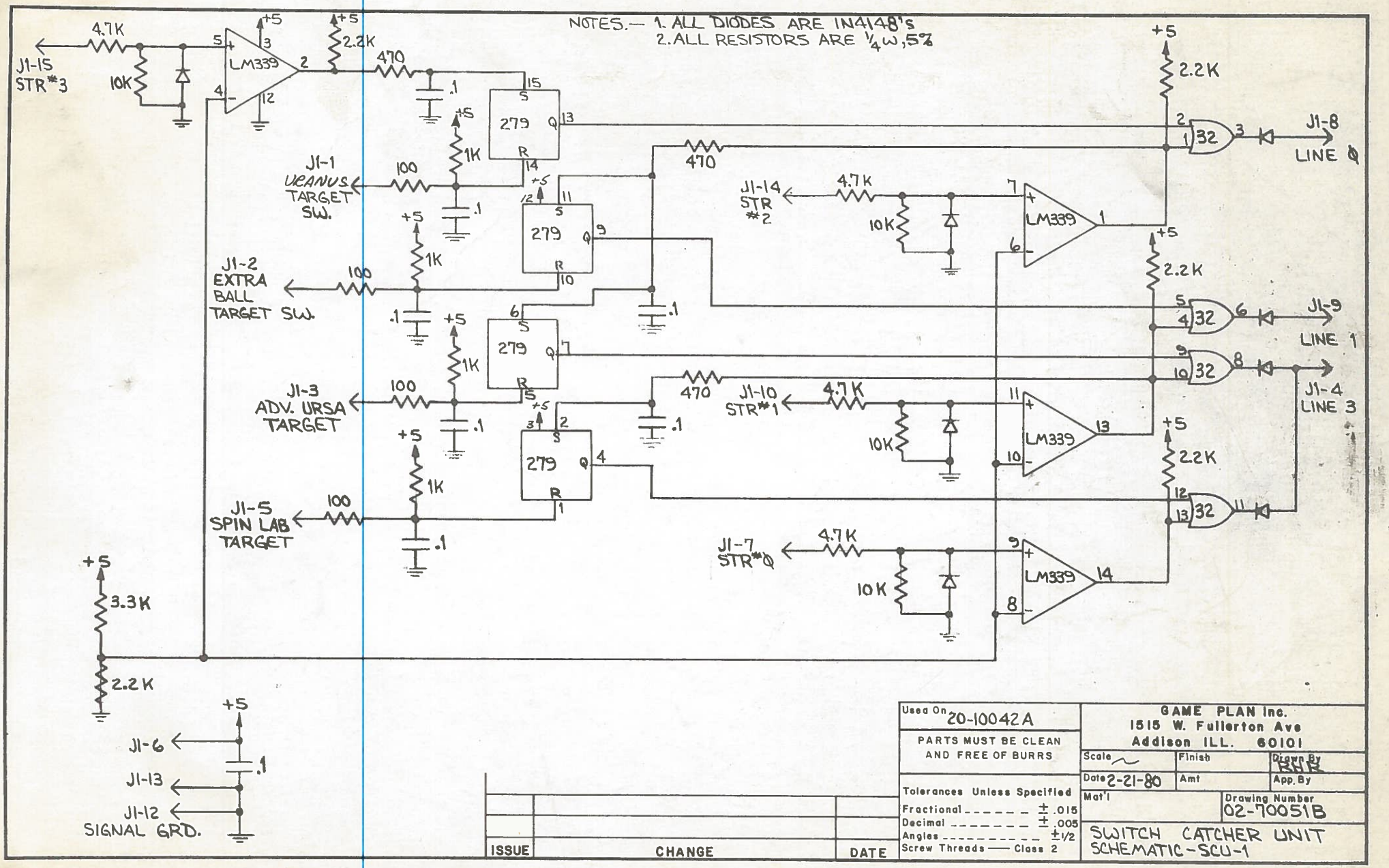

ISSUE	CHANGE	DATE

Used On 20-10042A

PARTS MUST BE CLEAN AND FREE OF BURRS

Tolerances Unless Specified
Fractional ± .015
Decimal ± .005
Angles ± ½
Screw Threads — Class 2

GAME PLAN Inc.
1515 W. Fullerton Ave
Addison ILL. 60101

Scale ~	Finish	Drawn By RHR
Date 2-21-80	Amt	App. By
Mat'l	Drawing Number 02-70051B	

SWITCH CATCHER UNIT SCHEMATIC-SCU-1

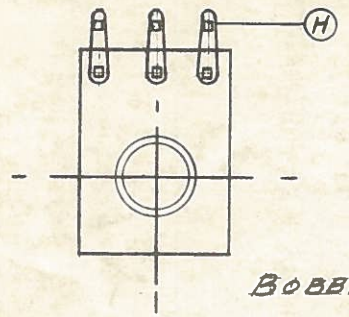

BOBBIN Ass'y

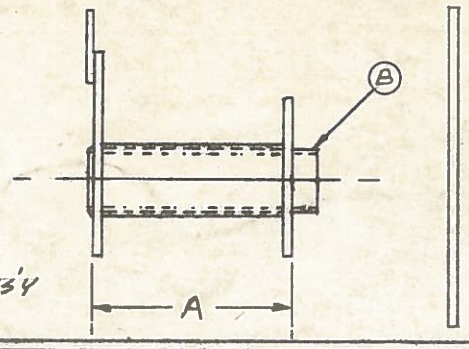

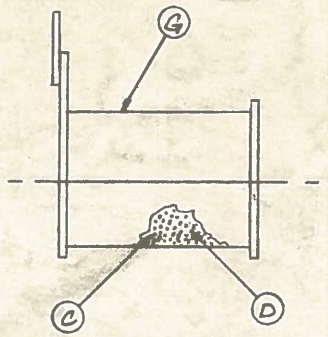

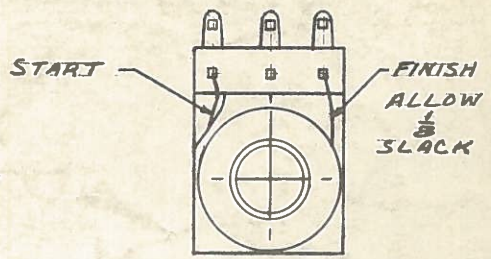

SOLENOID Ass'Y

	A	B	C	D	E	F	G	H
COIL NUMBER	BOBBIN	TUBE	WIRE GAGE-TYPE	NUMBER TURNS	RESISTANCE	DESIGN VOLTAGE	COIL WRAPPER	LUG NUMBER
21-50001B	03-40002N 1.562	03-40008N 1.686	No. 24 MAGNET	850	4.75 Ω	24 V.D.C.		
21-50002B	03-40002N 1.562	03-40008N 1.686	NO. 25 NO. 27	400 1000	2.8 Ω 13.4 Ω	24 V.D.C.		
21-50003B	03-40002N 1.562	03-40008N 1.686	NO. 25	1050	7.45 Ω	24 V.D.C.		
21-50004B	03-40002N 1.562	03-40027N	NO. 29	2000	33.8 Ω	24 V.D.C		
21-50005B	03-40002N 1.562	03-40008N 1.686	NO. 27	1400	15.4 Ω	24 V.D.C		
21-50006B	"	"	NO. 28	1800	25.8 Ω	24 V.D.C.		
21-50007B	03-40037B	03-40038A	NO. 24	1000	8 Ω	24 V.D.C.		
21-50008B	03-40002N	03-40008N	NO-22 NO-30	375 800	1.2 Ω 21.5 Ω	24 V.D.C. 24 V.D.C.		
21-50009B	03-40037B	03-40038A	NO-23	1100	6.2 Ω	24 V.D.C.		

GAME PLAN INCORPORATED
140 LIVELY BOULEVARD
ELK GROVE VILLAGE, IL 60007

SCALE:	APPROVED BY: WM 11-3-77	REV.1	DRAWN BY ED-C
DATE: 11-3-77			REVISED 4-25-78
MAT'L- AS NOTED	FINISH	AMT- AS REQ'D	USED ON GENERAL
SOLENOIDS			DRAWING NUMBER 21-50001 B THRU

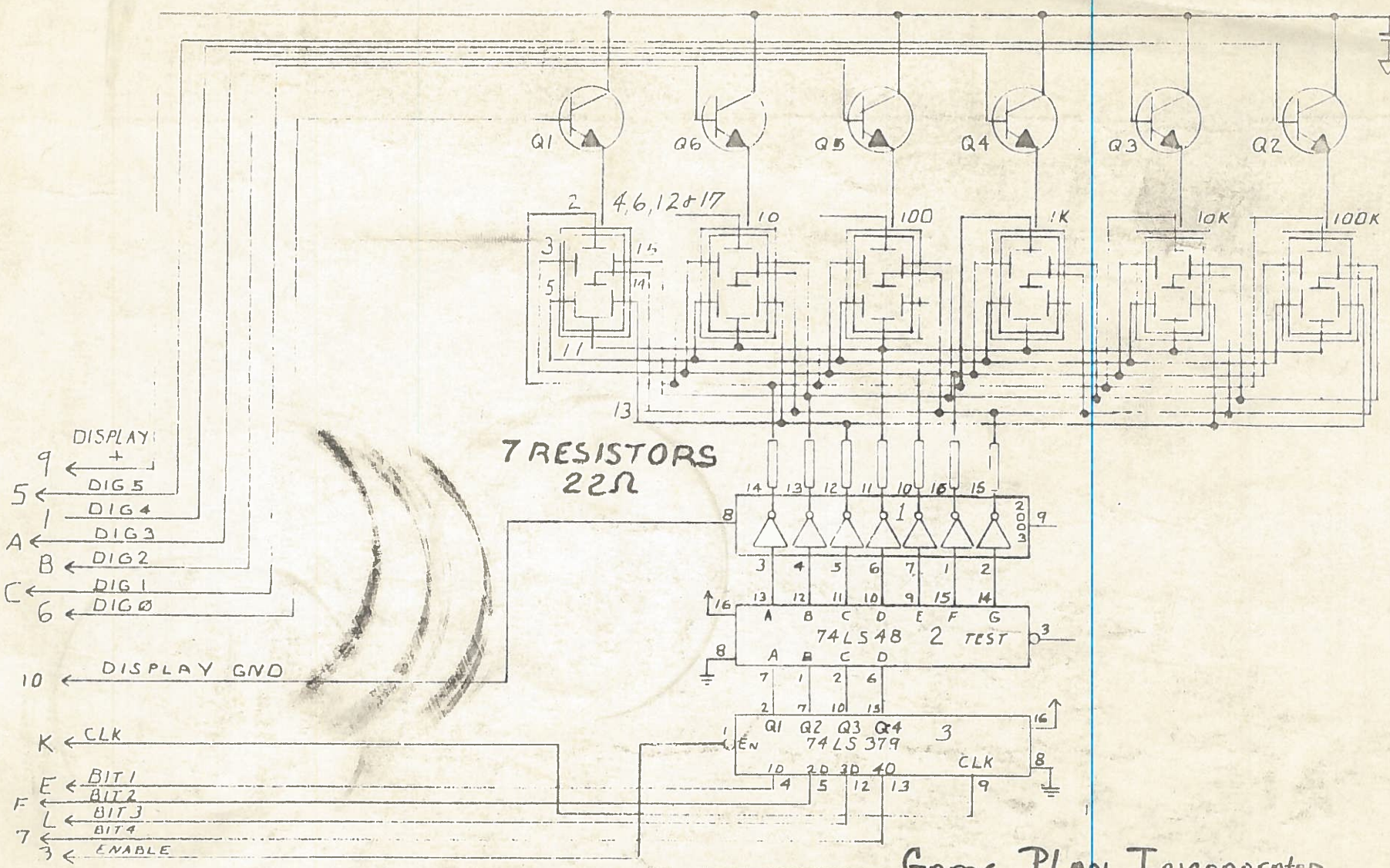

Game Plan Incoporated
1515 Fullerton
Addison - Illinois
60137

SCALE:	APPROVED BY:	DRAWN BY
DATE: 12 - 19 - 78		REVISED

BDU - 1 DISPLAY UNIT

DRAWING NO. 02-7

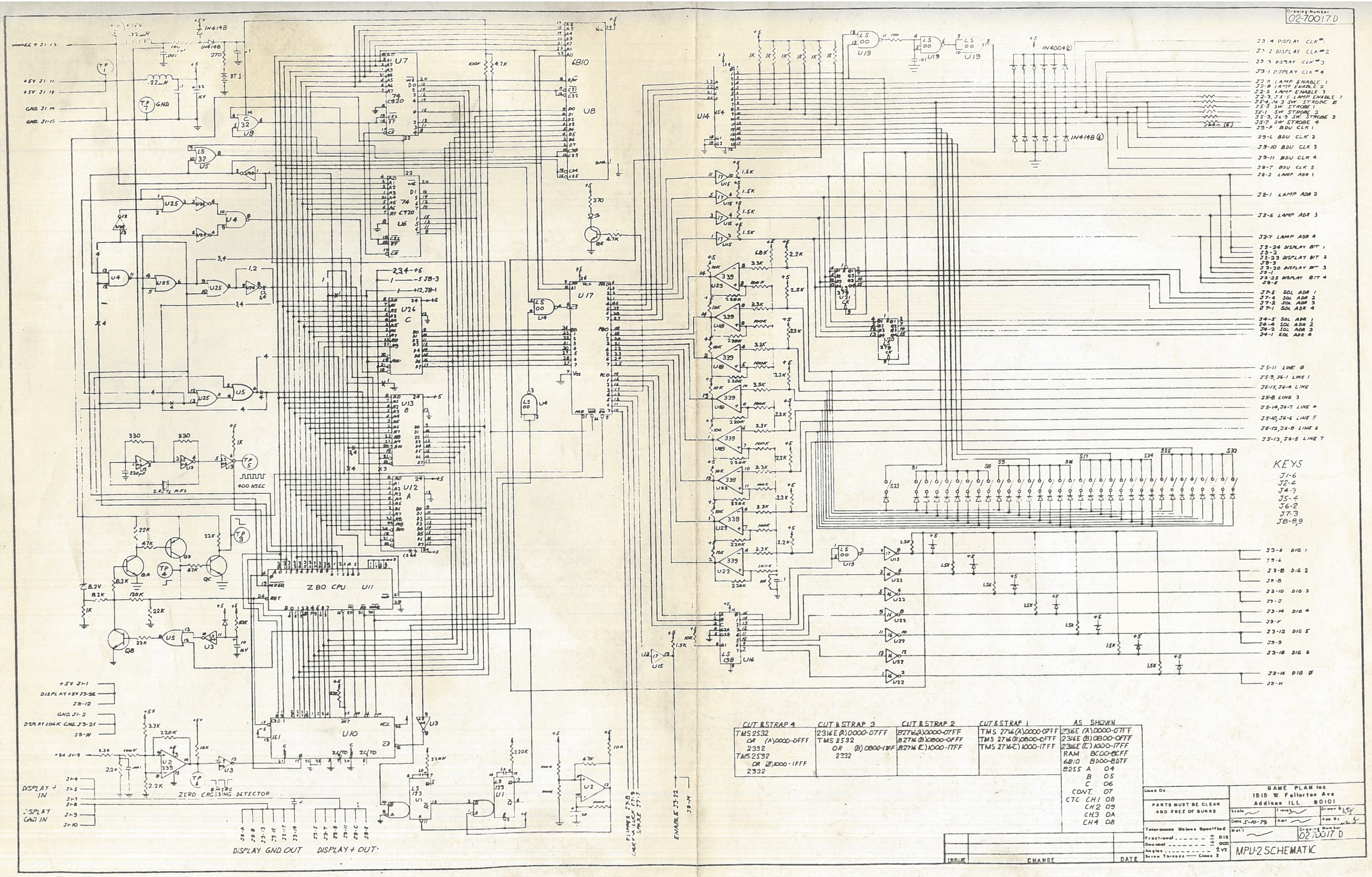

CUT & STRAP 4	CUT & STRAP 3	CUT & STRAP 2	CUT & STRAP 1	AS SHOWN
TMS 2532 OR (A) 0000-0FFF 2332	2316E (A) 0000-07FF	B2716 (A) 0000-07FF	TMS 2716 (A) 0000-07FF	2316E (A) 0000-07FF
TMS 2532 OR (B) 1000-1FFF 2332	TMS 2532 OR (B) 0800-17FF 2332	B2716 (B) 0800-0FFF	TMS 2716 (B) 0800-0FFF	2316E (B) 0800-0FFF
		B2716 (C) 1000-17FF	TMS 2716 (C) 1000-17FF	2316E (C) 1000-17FF
				RAM BC00-BCFF
				6810 BD00-BD7F
				B255 A 04
				B 05
				C 06
				CONT. 07
				CTC CH1 08
				CH2 09
				CH3 0A
				CH4 0B

Used On

PARTS MUST BE CLEAN AND FREE OF BURRS

Tolerances Unless Specified
Fractional ± .015
Decimal ± .005
Angles ± 1/2
Screw Threads — Class 2

GAME PLAN Inc.
1515 W. Fullerton Ave
Addison ILL. 60101

Scale ~ | Finish ~ | Drawn By
Date 5-10-79 | Appr | App By
Mat'l ~ | Drawing Number 02-70017 D

MPU-2 SCHEMATIC

ISSUE	CHANGE	DATE

Drawing Number
02-70019C

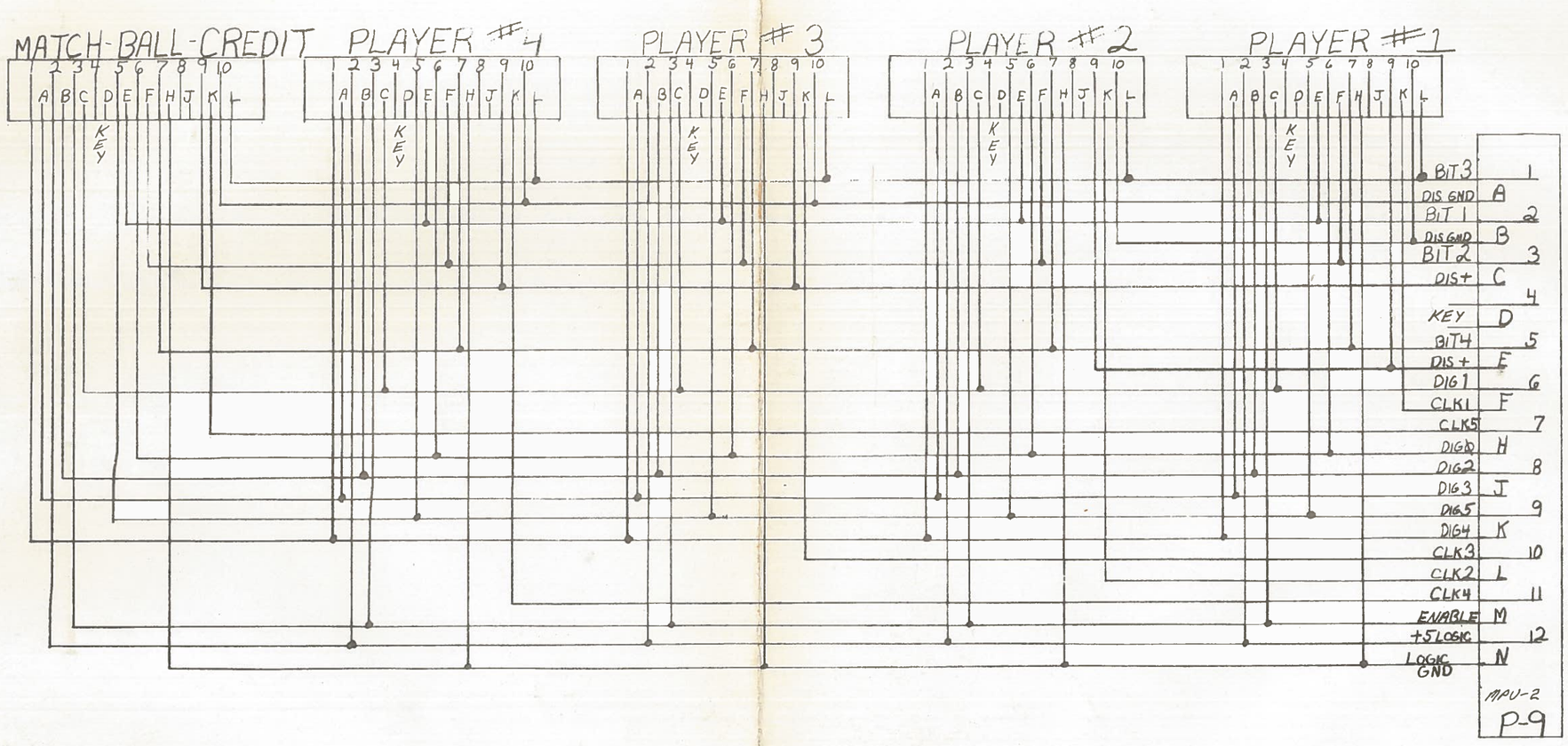

TEST DEPT.

ISSUE	CHANGE	DATE

Used On

PARTS MUST BE CLEAN AND FREE OF BURRS

Tolerances Unless Specified
Fractional ± 015
Decimal ± 005
Angles ±1/2
Screw Threads — Class 2

GAME PLAN Inc.
1515 W. Fullerton Ave
Addison ILL. 60101

Scale	Finish	Drawn By
Date 7-18-79	Amt	App By
Mat'l		Drawing Number 02-70019C

PINBALL DISPLAY CABLE

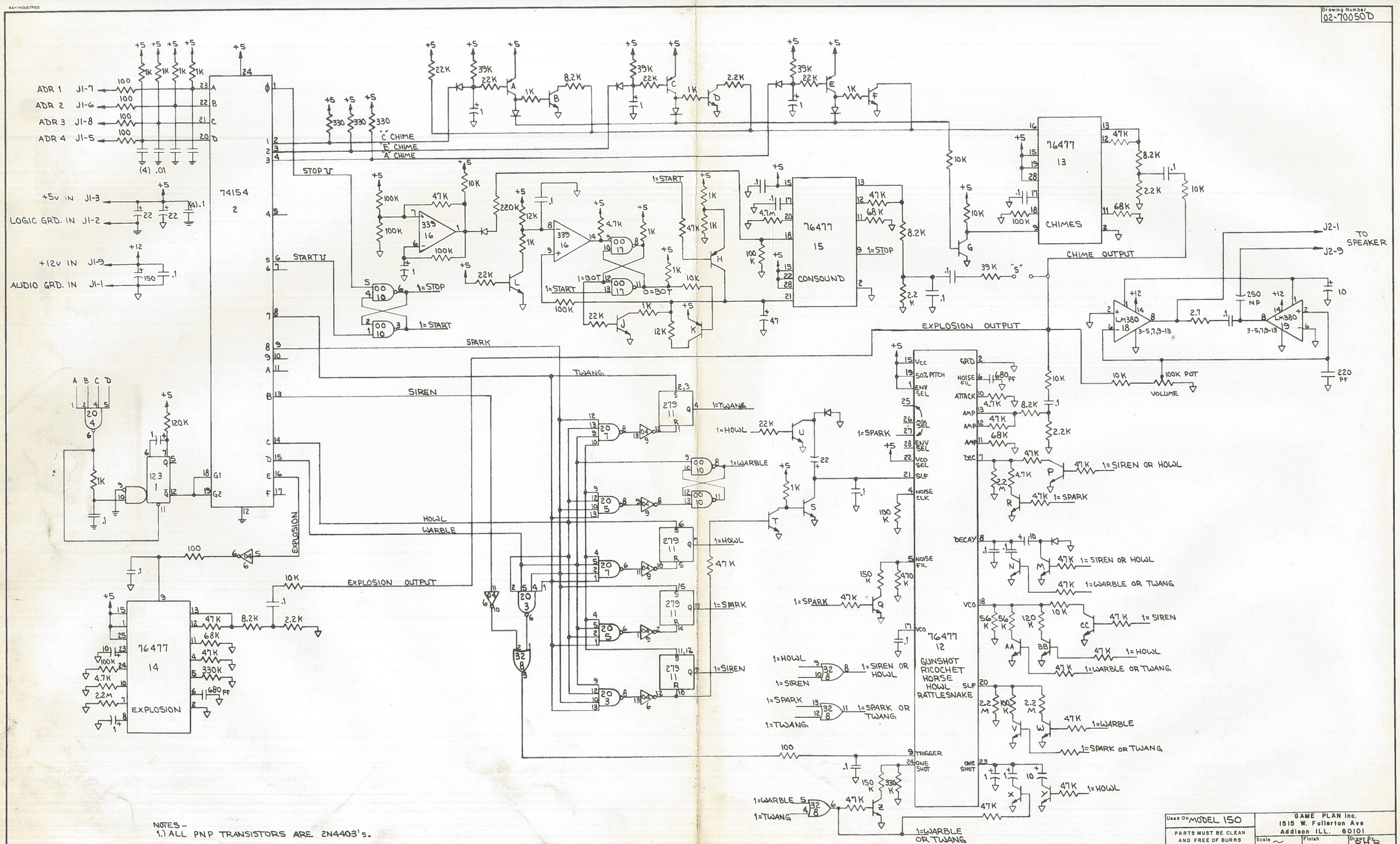

NOTES –
1.) ALL PNP TRANSISTORS ARE 2N4403's.
2.) ALL NPN TRANSISTORS ARE 2N3904's.
3.) ALL DIODES ARE 1N4148's.
4.) ALL CAPACITORS ARE IN MFD's UNLESS OTHERWISE NOTED.

ISSUE	CHANGE	DATE

Used On MODEL 150

PARTS MUST BE CLEAN AND FREE OF BURRS

Tolerances Unless Specified
Fractional ± .015
Decimal ± .005
Angles ± 1/2
Screw Threads — Class 2

GAME PLAN Inc.
1515 W. Fullerton Ave
Addison ILL. 60101

Scale ~	Finish	Drawn By RHR
Date 2-20-80	Amt	App. By
Mat'l		Drawing Number 02-70050D

SSU-4 SOUND CIRCUIT "SUPER NOVA"

B&M INDUSTRIES

Drawing Number
02-70047D

TO POWER SUPPLY

TO J15 ON POWER SUPPLY

TO J10 ON LDU-2

TO J7 ON LDU-2

TO CABINET

TO J1 ON SDU-1

TO J5 ON LDU-2

TO J6 ON LDU-2

TO J8 ON LDU-2

TO J5 ON MPU-2

SPACE LAB

SCU-1 SWITCH CATCHER

6	6.3 VAC	BLU-WHT
7	6.3 VAC RET.	BRN
WHT		
1	LF. FLIP SWITCH	GRA-RED
2	LF. FLIP SWITCH	GRA-RED
3	RT. FLIP SWITCH	RED-BLU
4	RT. FLIP SWITCH	RED-BLU
5	+24 VDC	YEL-BLK

1	LF. FLIP SWITCH	GRA-RED
2	LF. FLIP SWITCH	GRA-RED
3	RT. FLIP SWITCH	RED-BLU
4	RT. FLIP SWITCH	RED-BLU
5	+24 VDC	YEL-BLK

1	SPINNER	RED-GRN
2	TARGET	BLK-BLU
3	URANUS TGT	VIO-ORG
4	EXTRA BALL TGT	ORG
5	ADV. URSA TGT	WHT-GRN
6		
7		
8		
9	LINE 3	
10	LINE 1	
11	LINE Ø	
12	STR Ø	
13	STR 1	
14	STR 2	
15	STR 3	
16	+5 V	
17		
18	GND	

1	SPARE	
2	10,000 BONUS URSA	BRN-RED
3	8,000 BONUS URSA	RED-WHT
4	7,000 BONUS URSA	ORG-BLU
5	9,000 BONUS URSA	YEL-BRN
6	4,000 BONUS URSA	GRN-RED
7	5,000 BONUS URSA	BLU-GRA
8	6,000 BONUS URSA	VIO-YEL
9	1,000 BONUS URSA	GRA-BLK
10	LEFT ARROW	WHT-BRN
11	2,000 BONUS URSA	BRN-WHT
12	RIGHT ARROW	RED-BLK
13	3,000 BONUS URSA	ORG-GRA
14		YEL-VIO
15	RED	GRN-GRA

1	STROBE 1	WHT-RED
2	STROBE Ø	GRA-VIO
3	LINE Ø	RED-BRN
4	LINE 1	ORG-YEL
5	LINE 2	YEL-GRA
6	LINE 3	GRN-BLK
7	LINE 4	VIO-BLK
8	LINE 5	BRN-BLU
9	LINE 6	RED-VIO
10	LINE 7	YEL-RED
11	STROBE 4	WHT
12	STROBE 3	BLK
13	STROBE 2	WHT-VIO
14	YEL	
KEY	4	

1	URSA X3	
2	COMET X5	
3	50,000	
4	EXTRA BALL	
5	SPECIAL	
6	ORION X3	

1	SAME PLAYER	
2	50,000 W/LIT	
3	URSA X3 W/LIT	
4	ORION X3 W/LIT	
5	3,000 BONUS ORION	
6	1,000 BONUS ORION	
7	5X BONUS	
8	2,000 BONUS ORION	
9	2X BONUS	
10	SPEC.	
11	3X BONUS	
12		

1	OUTHOLE	
2	LEFT SLINGSHOT	
3	MIDDLE BUMPER (5,000)	
4	URSA KICKOUT HOLE	
5	RIGHT SLINGSHOT	
6	TOP BUMPER	
7	ORION KICKOUT HOLE	
8	BOTTOM BUMPER	
9	"O"	
10	500 W/LIT	
11	"E"	
12	4,000 BONUS ORION	
13	5,000 BONUS ORION	
14	7,000 BONUS ORION	
15	8,000 BONUS ORION	
16	9,000 BONUS ORION	
17	10,000 BONUS ORION	
18		

1	"V"	
2	"S"	
3	"U"	
4	"P"	
5	"E"	
6	"R"	
7	"O"	
8	MID BUMP	
9	"N"	

1	ADV	
2	LIT	
3	BONUS	
4	ADV LIT	
5	BONUS	
6	ADV OR BNS	
7	"A"	
8	L SLING	
9	SHOT	
10	OUTHOLE	
11	SPINNER	
12	5,000	
13	OUTLANE	
14	COL UP BNS	
15	COL UP BNS	
16	TOP BUMP	
17	BOT BUMP	
18	R SLING	
19	SHOT	
20	"V"	
21	"S"	
22	"U"	
23	"P"	
24	"E"	
25	"R"	
26	"O"	
27	MID BUMP	
28	"N"	

1	SPARE	
2	EXTRA BALL	
3	7,000 BONUS URSA	
4	9,000 BONUS URSA	
5	4,000 BONUS URSA	
6	6,000 BONUS URSA	
7	1,000 BONUS URSA	
8	LEFT ARROW	
9	3,000 BONUS URSA	
10	"U"	
11	"S"	
12	10,000 BONUS URSA	
13	8,000 BONUS URSA	
14	5,000 BONUS URSA	
15	2,000 BONUS URSA	
16	RIGHT ARROW	
17		
18		

1	SPARE	
2	SPARE	
3	SPARE	
4	SPARE	
5	SPARE	
6	SPARE	
7	SPARE	
8		
9		
10		
11		
12		
13		
14		
15		
16

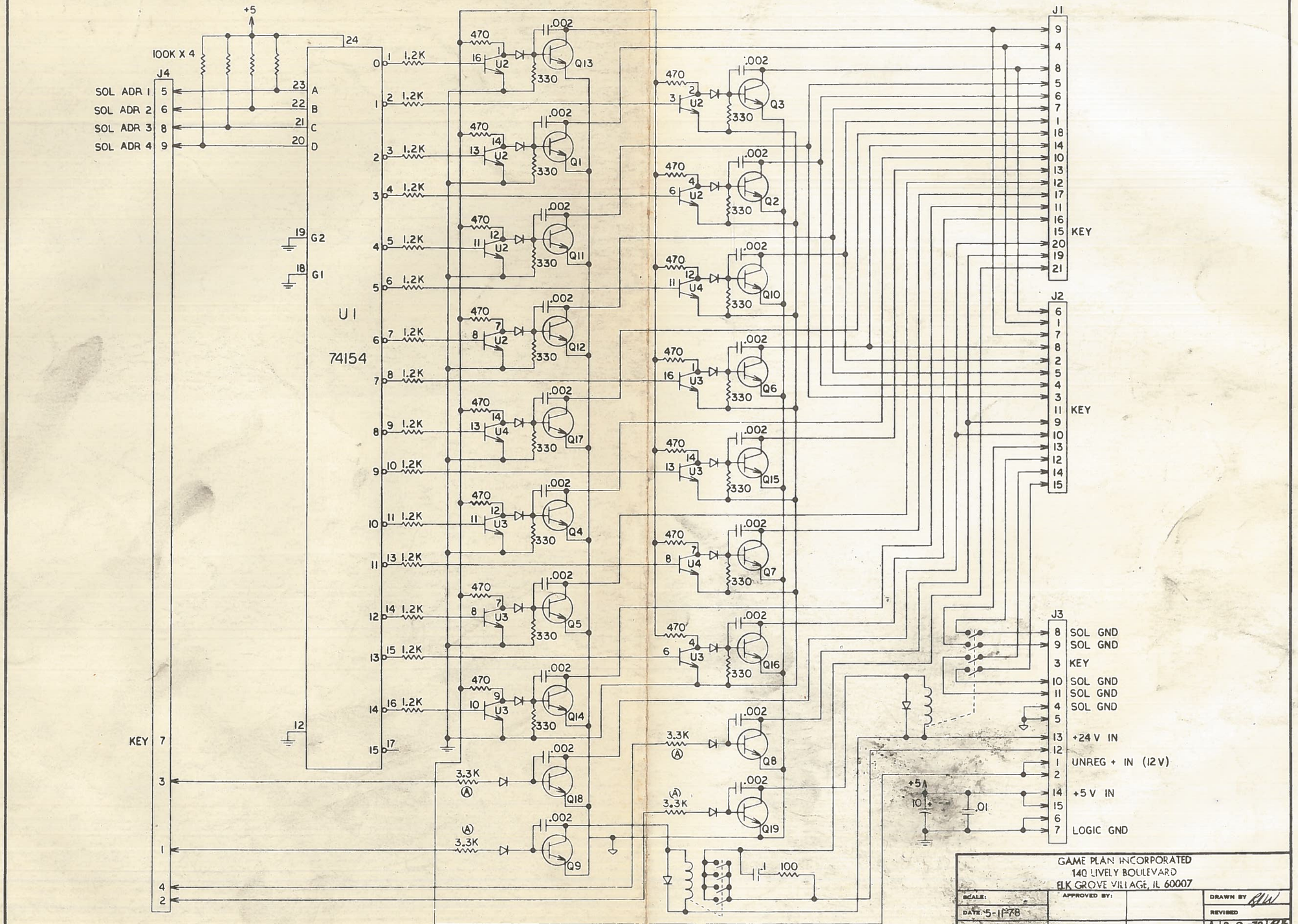

1. ALL DIODES ARE IN4004.
2. POWER TRANSISTORS ARE RCA 121, SE9301, 2N6388, OR EQUIV.
3. U2, U3, AND U4 ARE ULN2081 OR CA3081. PINS 5 AND 15 GND.

GAME PLAN INCORPORATED
140 LIVELY BOULEVARD
ELK GROVE VILLAGE, IL 60007

SCALE:	APPROVED BY:		DRAWN BY BW
DATE: 5-1-78			REVISED A 8-9-78

SDU-1 SOLENOID DRIVER

DRAWING NUMBER 02-70004C

17X22 PRINTED ON NO. 1000H CLEARPRINT

NOTES:
1. RECTIFIER BRIDGES ARE 25 AMP AND 200 VOLT PIV.
2. MOV 1 IS A V130LA10A FOR 120VAC AND A V250LA20A FOR 240 VAC LINE.
3. MOV 2 IS A VB2ZA12.
4. TABLE - 5A, PINBALL - 15A
5. TABLE - 5A, PINBALL - 20A

Drawing Number 02-7001BC

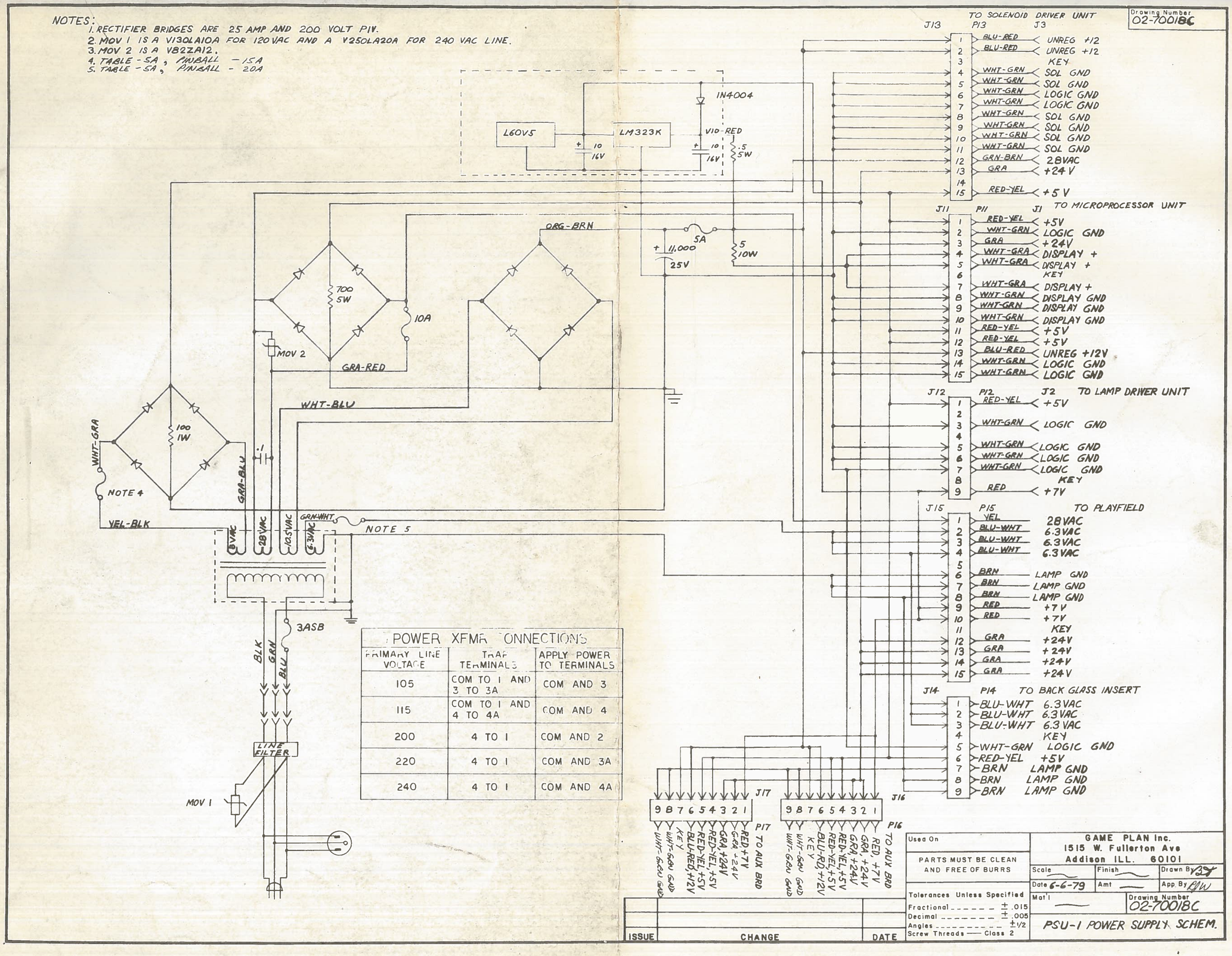

POWER XFMR CONNECTIONS		
PRIMARY LINE VOLTAGE	TRAF TERMINALS	APPLY POWER TO TERMINALS
105	COM TO 1 AND 3 TO 3A	COM AND 3
115	COM TO 1 AND 4 TO 4A	COM AND 4
200	4 TO 1	COM AND 2
220	4 TO 1	COM AND 3A
240	4 TO 1	COM AND 4A

ISSUE	CHANGE	DATE

Used On

PARTS MUST BE CLEAN AND FREE OF BURRS

Tolerances Unless Specified
Fractional ± .015
Decimal ± .005
Angles ± 1/2
Screw Threads — Class 2

GAME PLAN Inc.
1515 W. Fullerton Ave
Addison ILL. 60101

Scale — Finish — Drawn By JSY
Date 6-6-79 Amt — App By RJW
Mat'l — Drawing Number 02-7001BC

PSU-1 POWER SUPPLY SCHEM.

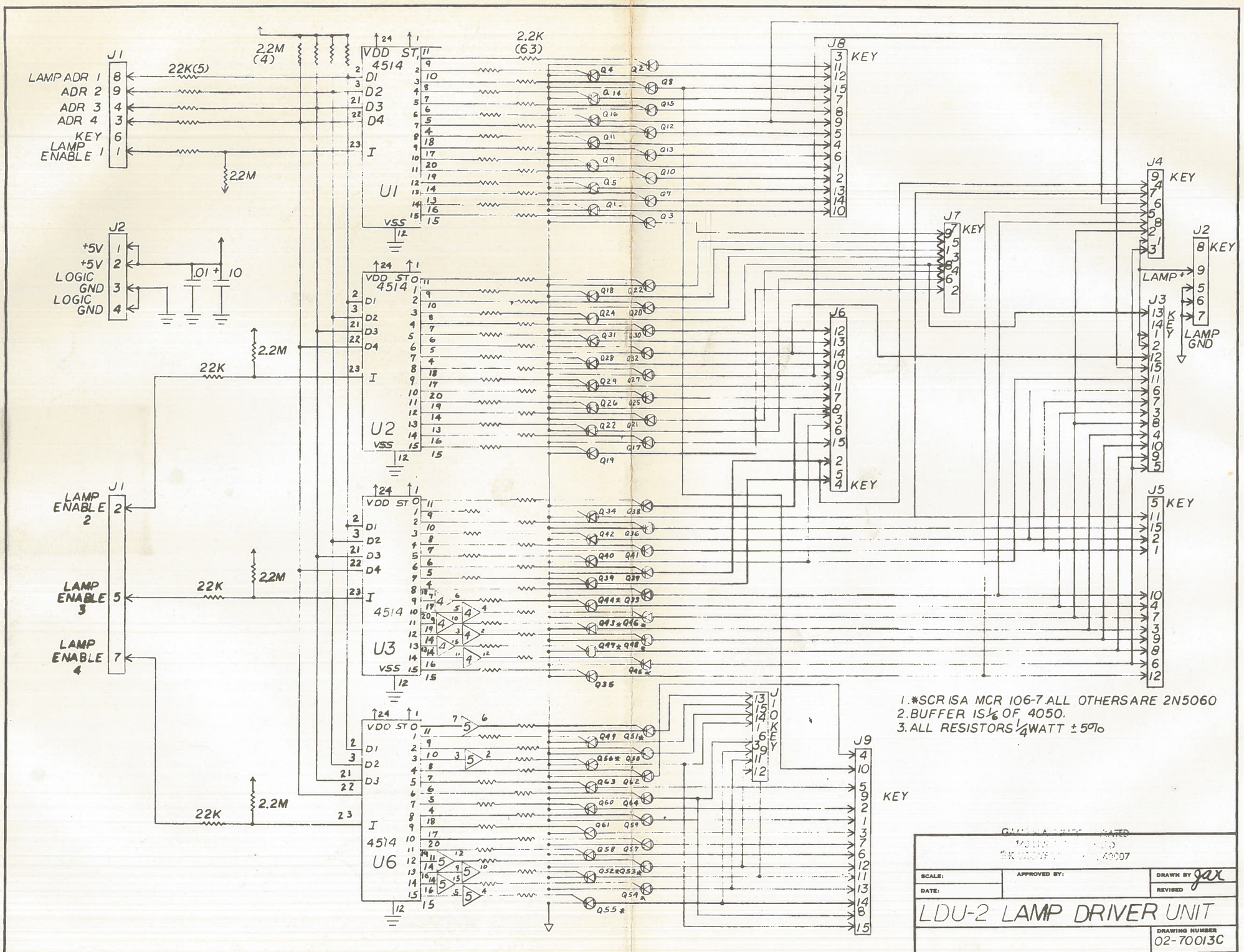
J1
LAMP ADR 1
ADR 2
ADR 3
ADR 4
KEY
LAMP ENABLE 1
22K(5)
2.2M (4)
2.2K (63)
2.2M
VDD ST
4514
D1
D2
D3
D4
I
U1
VSS
J2
+5V
+5V
LOGIC GND
LOGIC GND
.01
10
22K
U2
LAMP ENABLE 2
LAMP ENABLE 3
LAMP ENABLE 4
U3
U6
J8
J7
J6
J4
J3
J5
J9
J10 KEY
KEY
LAMP+
LAMP GND
1. *SCR ISA MCR 106-7 ALL OTHERS ARE 2N5060
2. BUFFER IS 1/6 OF 4050.
3. ALL RESISTORS 1/4 WATT ±5%
SCALE:
DATE:
APPROVED BY:
DRAWN BY jax
REVISED
LDU-2 LAMP DRIVER UNIT
DRAWING NUMBER
02-70013C

B&H INDUSTRIES

Drawing Number
02-70021C

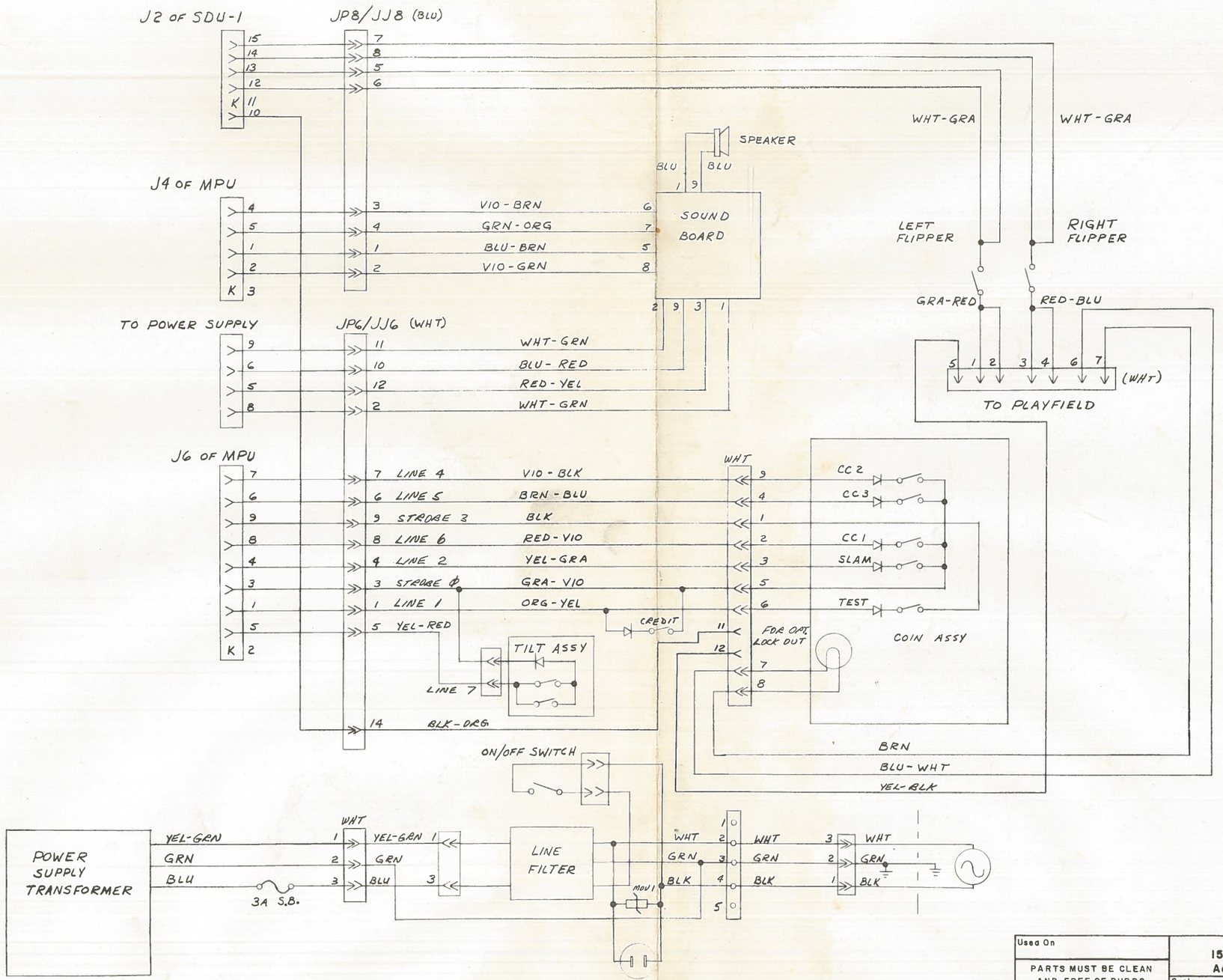

MOV1 IS A V130LA10A FOR 120 VAC LINE.
MOV1 IS A V250LA20A FOR 240 VAC LINE.

ISSUE	CHANGE	DATE
3	SUPER NOVA ADDITIONS	2-8-80
2	REDRAWN FROM 5-1-79	12-14-79

Usea On

PARTS MUST BE CLEAN AND FREE OF BURRS

Tolerances Unless Specified
Fractional ± .015
Decimal ± .005
Angles ± 1/2
Screw Threads — Class 2

GAME PLAN Inc.
1515 W. Fullerton Ave
Addison ILL. 60101

Scale	Finish	Drawn By RK
Date 12/14/79	Amt	App. By
Mat'l		Drawing Number 02-70021C

CABINET HARNESS